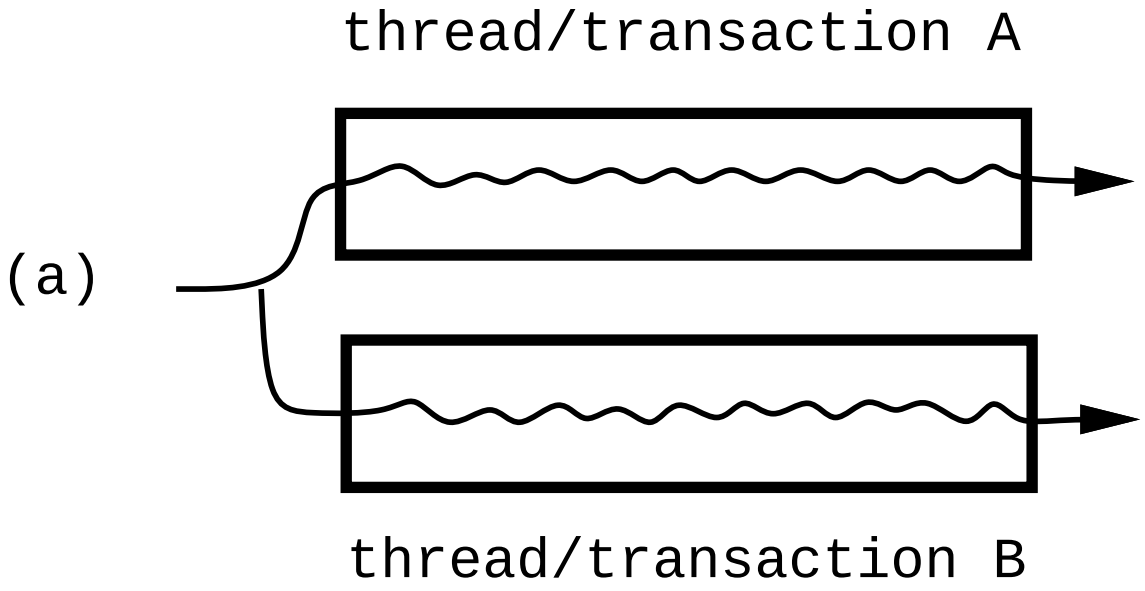
thread/transaction A
(a)
thread/transaction B

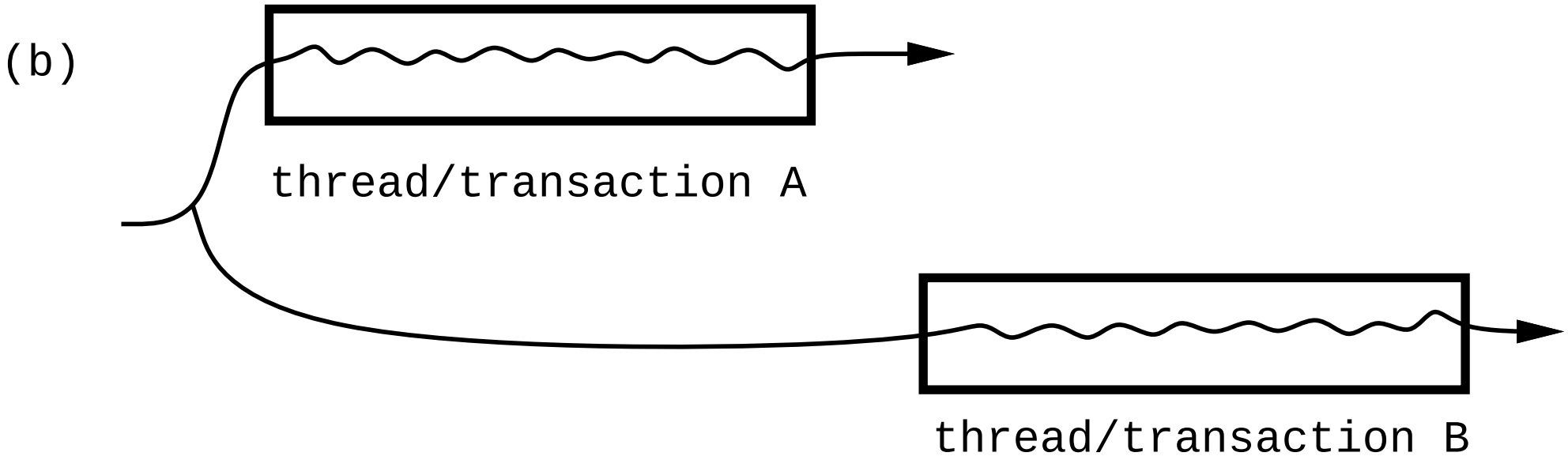
(b)
thread/transaction A
thread/transaction B