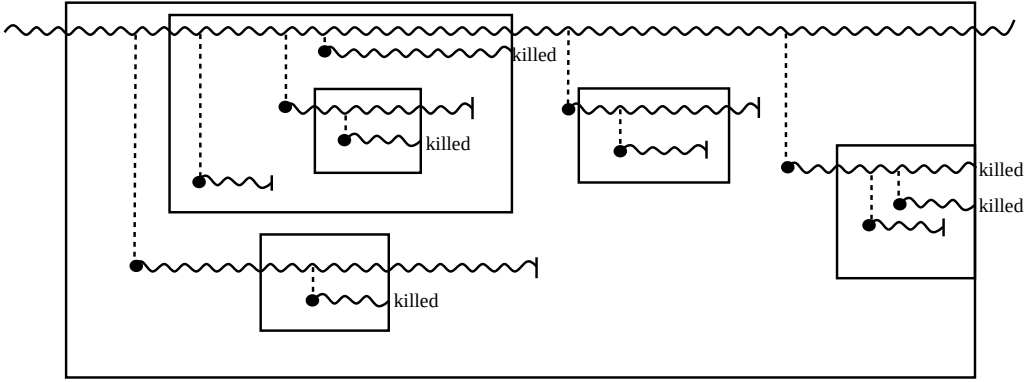
killed
killed
killed
killed
killed
killed